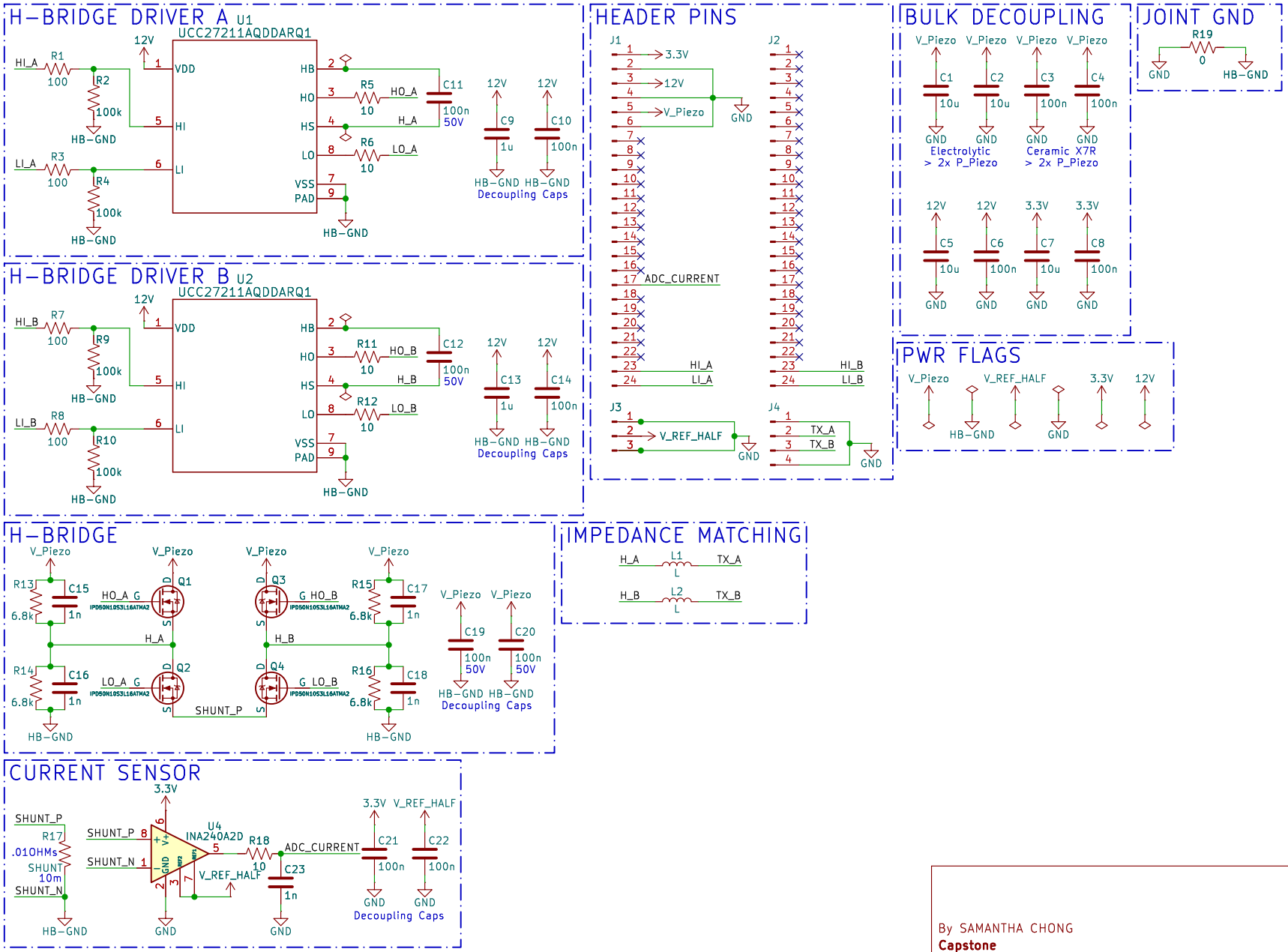

By SAMANTHA CHONG

Capstone

Sheet: /

File: TX.kicad_sch

Title: SWARM TX COMMs

Size: A4	Date: 2026-03-23	**Rev: 2.1**
KiCad E.D.A. 9.0.6		Id: 1/1